THE NEUMA CATHETER SAFETY LOCK™

Deter and Detect Central Line Tampering

Neuma Innovations, LLC

NON-SOLICITATION

THIS DOCUMENT IS NOT INTENDED AS AN OFFER NOR A SOLICITATION OF AN OFFER NOR IS IT AN ADVERTISEMENT FOR THE SALE OF ASSETS.

NOTHING CONTAINED IN THIS PRODUCT RATIONALE IS, OR SHALL BE RELIED UPON, AS A PROMISE, GUARANTY, REPRESENTATION OR WARRANTY, SPECIFIC OR IMPLIED, AS TO FUTURE PERFORMANCE OF THE ASSETS DESCRIBED. ANY FINANCIAL PROJECTIONS ARE ESTIMATES BASED ON CERTAIN ASSUMPTIONS AND LIMITATIONS THAT MAY NOT BE ACCURATE OR ATTAINABLE.

DISTRIBUTION OF THIS INTELLECTUAL PROPERTY TO ANY PERSON OTHER THAN PERSON TO WHOM THIS DOCUMENT WAS ORIGINALLY DELIVERED IS UNAUTHORIZED, AND ANY REPRODUCTION OF THIS DOCUMENT IN WHOLE OR IN PART, OR DIVULGENCE OF ANY OF ITS CONTENTS WITHOUT THE PRIOR WRITTEN CONSENT OF AN AUTHORIZED OFFICER OF NEUMA INNOVATIONS IS PROHIBITED. RECIPIENT OF THIS DOCUMENT FURTHER AGREES THAT ALL INFORMATION CONTAINED HEREIN IS CONFIDENTIAL AND PROPRIETARY TO AND IS THE EXCLUSIVE PROPERTY OF NEUMA INNOVATIONS AND IS ACCEPTED BY RECIPIENT FOR THE PURPOSE OF EVALUATION ONLY.

BY ACCEPTING A COPY OF THIS DOCUMENT, RECIPIENT AGREES TO KEEP THE INFORMATION CONTAINED HEREIN CONFIDENTIAL.

OVERVIEW

INTRODUCTION

The Neuma CSL™ (Catheter Safety Lock™) is a simple medical tool designed to deter the purposeful abuse and accidental errors that occur for the millions of patients in the US who have central catheter lines inserted. The CSL™ device prevents unwanted flow through the line, makes it evident when a central venous catheter has been used for an illicit purpose, and acts as a safeguard against accidental errors.

BACKGROUND

The central venous line (CL) has become a ubiquitous health care device. These catheters are thin, flexible, hollow tubes that extend deeply into the large and deep veins of the body, close to the heart. They provide long-term intravenous access for dialysis and hyperalimentation (intravenous nutrition) as well as for treatment of infections, cancer, and other chronic conditions. Roughly 3 to 4 million central lines are inserted into patients in the United States each year [1].

Growing at a rate of 6% annually, the peripherally inserted central catheter (PICC) accounts for nearly 40% of the CL market with centrally inserted catheters accounting for the remainder [1].

All PICC lines and most of the centrally inserted catheters have portions of the line which protrude out through the skin for access to infuse medication or intravenous feeding formulas.

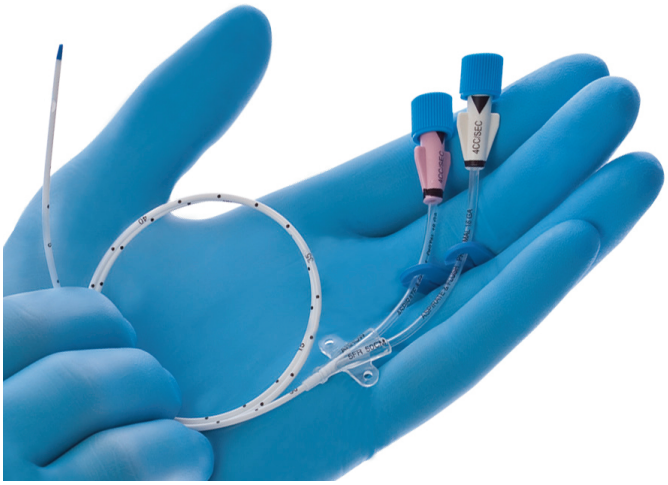

Arrow® brand double lumen PICC line.

While these catheters provide significant advantages over the much shorter peripheral intravenous lines, they also carry significant risks, including infection, thrombosis of the line, and the chance of injecting powerful and dangerous medications too quickly into the deep, central circulation.

In recognition of these risks, many central lines now come with a protective sliding clip. This flat plastic part has a tear-shaped cutout that pinches the line shut to help prevent unwanted infusions.

Example of a common sliding plastic catheter clip.

The clip can slide open accidentally and can be easily manipulated by the patient or others who are not medically qualified to access the lines. When it is surreptitiously opened, it can be closed again without any evidence of tampering. This device therefore lacks security and does not show any tell-tale signs that someone has tampered with it.

COMPLICATIONS OF CENTRAL LINES

The risks for CL complications are significant. The CDC estimated in 2011 that 41,000 bloodstream infections associated with central lines occur each year in the US [2]. These infections are life threatening because the lines are pushed deep into the central circulation and infections can spread throughout the body rapidly to virtually any organ, including the brain, heart, lungs, liver and bone marrow.

Furthermore, non-infectious adverse drug events occur in up to 5% of hospitalized patients [2]. And a significant number of these events occur through central lines.

The risks for central line complications are especially high in persons who abuse intravenous recreational drugs. These persons are known as an intravenous drug users (IVDUs).

An IVDU who requires a central line for medical therapy will often also use the CL to shoot up harmful drugs either while in the hospital or after discharge from the hospital if the central line is left in place for ongoing therapy. This abuse can result in infection, reinfection or harmful overdose of a drug delivered directly into the central circulation.

PRODUCT RATIONALE ONE
Prevention of CL abuse by intravenous drug users

IVDUs frequently require long-term antibiotics. Half the cases of heart valve infection in the US occur in IVDUs[2]. These infections require from 2 to 6 weeks of intravenous antibiotic therapy through a CL. IVDUs also get infections in the bones, liver, lungs and brain – all of which are often treated with long term intravenous therapy through a CL.

Unfortunately, prolonged CL therapy provides persons with drug addiction easy access to the central line, and they use it to inject illicit drugs, thus increasing the risk of death from overdose or further infections. No effective strategies currently exist to prevent this line abuse.

"I have had 2 patients die of illicit drug overdose using their PICC lines after swearing they were not users. We often keep IVDU patients in the hospital for prolonged periods of time because we fear this complication." [3]

There are no data on the number of drug overdoses or line infections directly attributable to IVDU CL abuse. But concerns about those risks often keep patients in the hospital when outpatient therapy would otherwise result in substantial savings.

A study by the **National University Hospital in Singapore** found that shifting PICC line antibiotic treatment of IVDUs from inpatient to outpatient settings resulted in direct medical cost savings up to 44%. But within outpatient treatment, PICC line complications related to IVDU patients accounted for 28-43% of the financial burden.[3]

The **University of Kentucky Medical Center** has estimated that IVDUs with central lines spent an extra 2,669 days in their hospital in the 20 months leading up to May 2014. This was 18% of the hospital's "opportunity days"* and was the leading cause of delayed patient discharge. The financial cost for keeping these patients in hospital is on the order of $3,000 to $5,000 per day per patient.

Laura Fanucchi, MD, Assistant Professor of Medicine and at the University of Kentucky Medical Center is working on the problem of delayed discharge. Despite educational efforts, her faculty members have been reluctant to discharge IVDU patients with central lines. After hearing about the Neuma CSL, her comment was ***"This would be extremely helpful. How could anyone say 'No' to this product?"***

The **University of California, Irvine Medical Center** experienced 10,400 opportunity days in fiscal year 2014. Approximately 20% of these days would have cost the institution nearly $7 million.

The results of a **UCI Medical Center** survey confirm the prevalence of practitioners' concerns:

• 84% of respondents were "concerned or very concerned" about IVDU patients abusing their central line after being discharged from the hospital.

• Over 50% replied they keep patients in the hospital for treatment due to concerns about line abuse.

• 94% answered they would choose to send an IVDU patient home with a central line if there was a device which could effectively lock access to the line.

Moreover, physicians who care for IVDU patients acknowledge that many patients inject drugs into their CL even while they are in the hospital.

"We often have issues with patients actively using illicit drugs while still in the hospital, let alone leaving hospital with PICC lines." [3]

PRODUCT RATIONALE TWO
An extra measure of safety for patients with a CL

The Institute of Medicine in its clarion call report *"To Err is Human"* found that 98,000 people die in hospitals each year from preventable medical errors[6]. The greatest of these is medication errors.

As noted, central lines are powerful and important tools but carry significant risks. Two of the greatest risks are accidental infusion of the incorrect medication or excessive infusion of fluids or medications through a line that should be turned off. Some CLs have 2 or 3 ports; that is, 2 or 3 lines running through a junction into a single combined catheter that actually enters the body. When the patient has more than one port, each port is often reserved for a specific function. For instance, a cancer patient may have one port for chemotherapy, one port for antibiotics and fluids, and one port for drawing blood for testing. Nurses must keep these ports separate and use them only for their prescribed purposes. Using the Neuma CSL would add a new level of safety.

The Neuma CSL could be incorporated into a "time out" procedure, a step back from an infusion or blood draw to ensure that the therapy was being administered correctly. This process would provide a valuable extra step for patient safety.

THE NEUMA CSL: AN INNOVATIVE SOLUTION

DETER AND DETECT TAMPERING

The Neuma Catheter Safety Lock is a small plastic clamp that snaps onto a central line in such a way that greatly deters abuse of the line while it is in place and renders it obvious when someone has tampered with the line.

AN ADDED LEVEL OF SAFETY

As part of an institutionalized "time out" procedure, **The Neuma Catheter Safety Lock** adds a new measure of safety by requiring the practitioner to remove and replace the CSL each time the lines are used.

HOW TO USE THE NEUMA CSL

The three photos to the right illustrate how easy it is to use the device. In the closed state, the lines are pinched shut and cannot be accessed without destroying the CSL. When the device is opened, the ratchet base pins are permanently broken.

At this point it is visibly evident to the practitioner if the device has been tampered with and it cannot be used again.

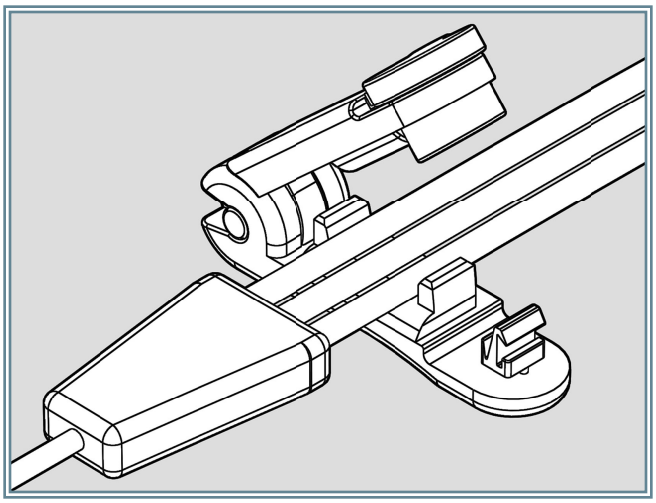

STEP ONE
Place the lines into the walled cradle.

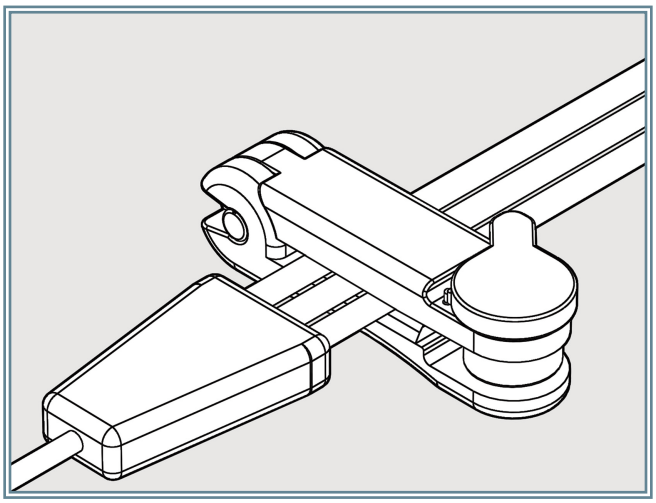

STEP TWO
Close the CSL and it will automatically lock shut. The catheter lines cannot be accessed until the clamp is opened.

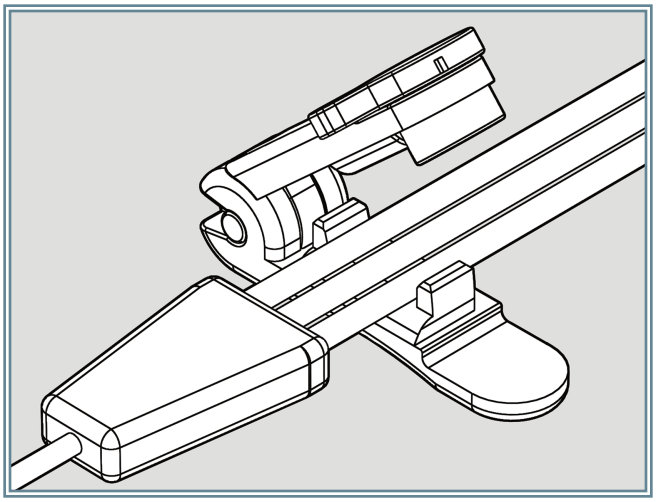

STEP THREE
Twist the knob to open the CSL. This action breaks the stem on the base of the hook, which is then captured in the top arm for easy disposal.

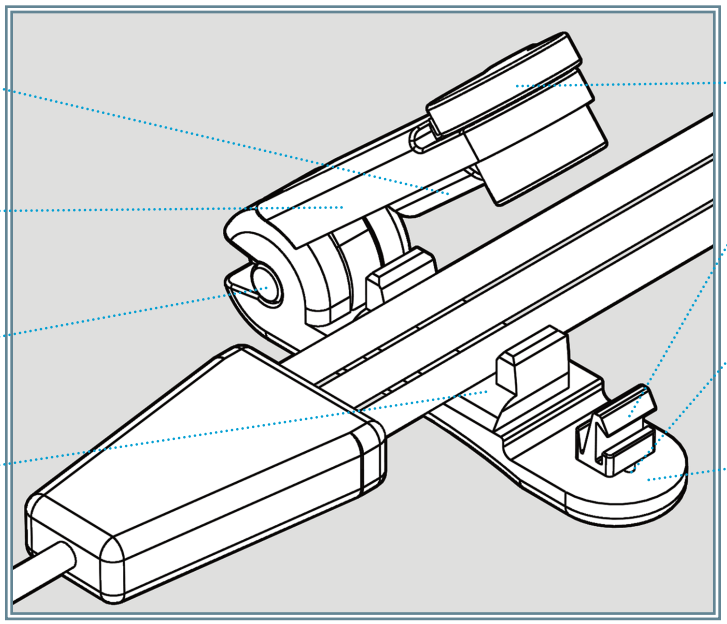

FEATURES AND BENEFITS

FEATURE: There are two pinching surfaces.
BENEFIT: Flow through the line is securely closed.

FEATURE: The pinching surfaces have large radii.
BENEFIT: The line is not damaged when pinched.

FEATURE: Turning the paddle breaks the ratchet base pins that connect the ratchet to the arm.
BENEFIT: It is visibly obvious when the device has been opened or tampered with, and the device cannot be used more than once.

FEATURE: The pinching surfaces are nested.
BENEFIT: Needle access is physically blocked.

FEATURE: Turning the paddle opens the CSL.
BENEFIT: The rotary motion doesn't require a lot of force and minimizes the risk of tugging on the line when opening the device.

FEATURE: The broken ratchet gets captured by the top arm.
BENEFIT: There are no extra pieces to dispose of.

FEATURE: The hinge is press fit into a blind hole.
BENEFIT: The device cannot be disassembled without destroying it.

FEATURE: The cradle walls mate into the top arm.
BENEFIT: The catheter lines cannot be removed.

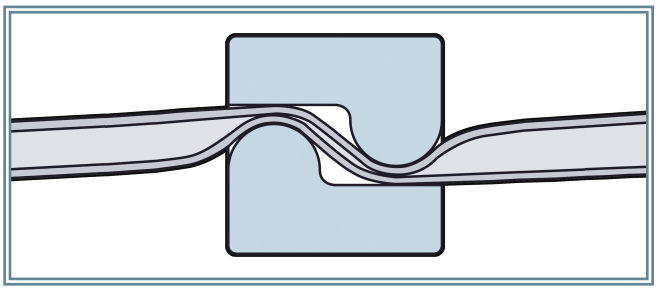

Cross section showing the two pinching surfaces closing off flow in the catheter line.

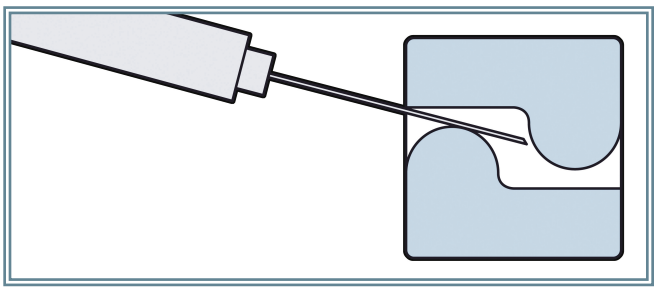

The pinching surfaces also block straight needle access.

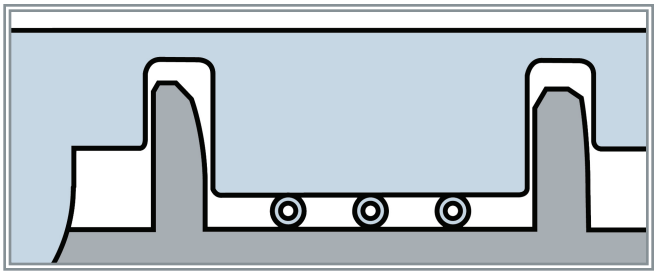

Section view shows how the catheter lines are trapped between the cradle walls when the device is closed.

UCI MEDICAL CENTER IVDU SAFE DISCHARGE SURVEY

When you are considering discharging a patient with a central line (PICC or other) who has a significant history of intravenous drug abuse, how concerned are you that the patient will abuse his or her central line?

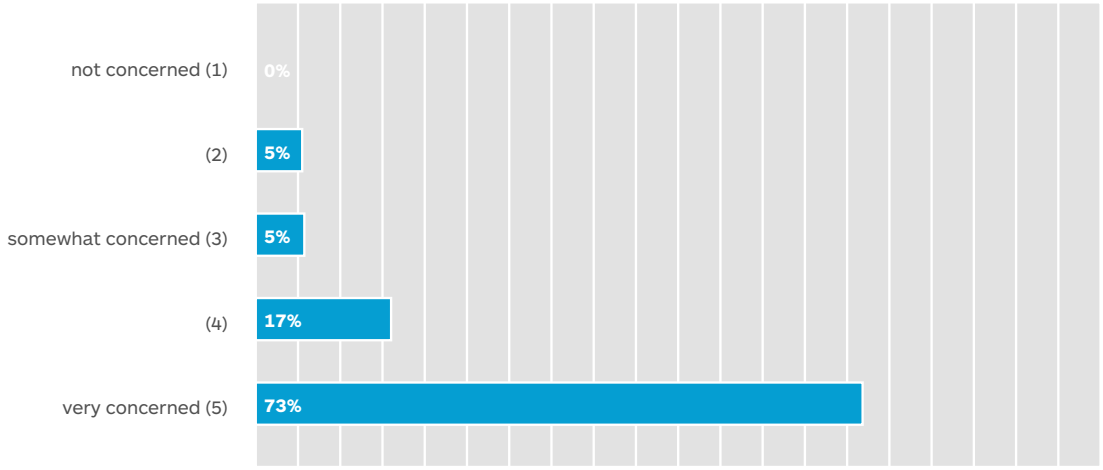

If such an IVDU patient requires a central line (PICC or other) for antibiotics or other needs, how often would you keep the patient in the hospital over concern about abuse of the central line?

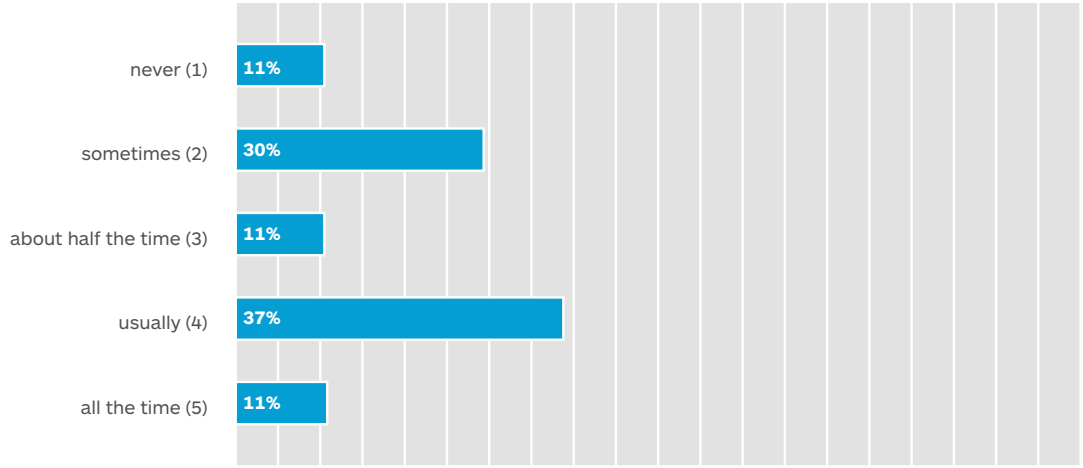

If you had available a device that would effectively lock the central line and prevent abuse, how often would you send the IVDU patient home with the central line (PICC or other) for prolonged treatment?

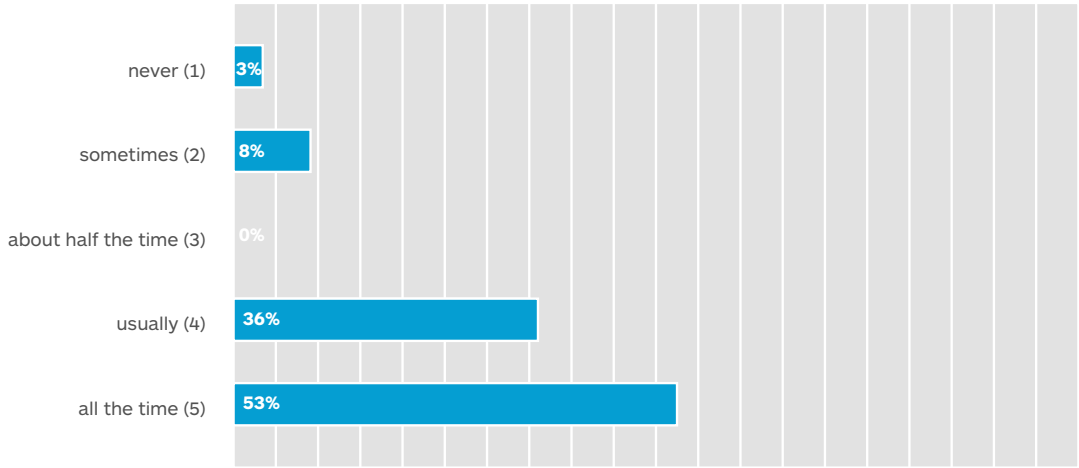

ESTIMATING THE BUSINESS OPPORTUNITY

SALES AND PROFIT ESTIMATES

Almost 300 million catheters are used each year in the United States alone. Approximately **3 million** of these are central venous catheters.[1]

The average length of treatment is **18 days**.[4]

The average number of infusions is **2.5 per day**.[4]

Using these data, we can estimate a potential annual market size of 135M units. If we assume a net profit of $.30 per unit and a 25% market penetration, net profit from total Neuma CSL sales would be **$10,125,000 per year.**

Peripherally inserted central catheters continue to be the fastest growing product in the specialty access category, growing approximately 36% on a constant currency basis.[6]

$$3{,}000{,}000\left(\frac{\text{catheters}}{\text{year}}\right) \times 18\left(\frac{\text{days}}{\text{catheter}}\right) \times 2.5\left(\frac{\text{Neuma CSL units}}{\text{day}}\right) = 135{,}000{,}000 \text{ units sold per year}$$

$$135{,}000{,}000\left(\frac{\text{Neuma CSL units}}{\text{year}}\right) \times \$.30 \text{ profit per unit} \times 25\% \text{ market penetration} = \$10{,}125{,}000 \text{ annual net profit}$$

A COMPELLING RETURN ON INVESTMENT STORY

Pictured below is an Arrow® PICC ErgoPack™ System. In addition to the central line, this package includes many accessories such as injection needles, hand gel, a sharps disposal cup, clamps, a scalpel and a surgical gown.

For very little additional cost, a few Neuma Catheter Safety Locks could be added to a CL system. From the perspective of the medical device vendor, the ROI on this small additional cost would be (1) a compelling product feature differentiation and (2) a significant new revenue stream from future sales of the disposable CSLs during the treatment period.

And, as noted previously, there is the potential for hospitals and other medical service providers to save hundreds of millions of dollars annually by using central line packages that include the CSLs.

The vendor, the hospital, the insurance provider and the patient all benefit from the adoption of Neuma CSLs into the CL product line.

NEUMA TEAM

LLOYD RUCKER, MD
Professor, Medicine
Vice Chair, Educational Affairs, Emeritus
Physician Advisor, Case Management
University of California, Irvine School of Medicine
lrucker@uci.edu
PROFILE >>

HAL RUCKER
BS / MS Mechanical Engineering, Stanford University
Entrepreneurial product design engineer with a focus on innovation and user experience.
hrucker@me.com
PROFILE >>

TRACY WEATHERBY | ACTIVE INGREDIENT
Market assessment and business planning consulting and services.
PROFILE >>

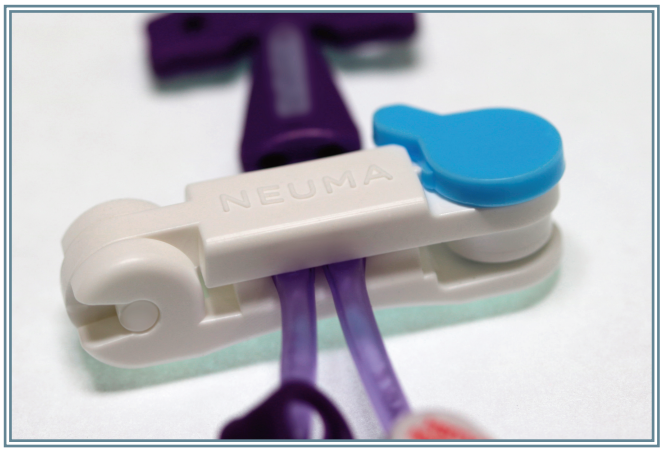

INTELLECTUAL PROPERTY

PATENT PENDING
The Neuma Catheter Safety Lock is patent pending. Catheter Safety Lock, CSL, Neuma Catheter Safety Lock and Neuma CSL are trademarks of Neuma Innovations.

REFERENCES

* An "opportunity day" is a day over the usual expected duration of a hospital stay based on Medicare data.

1. The Joint Commission. *Preventing Central Line-Associated Bloodstream Infections: A Global Challenge, A global Perspective, 2013*
2. http://www.cdc.gov/VitalSigns/HAI/index.html
3. Journal of Antimicrobial Chemotherapy. *Safe and successful treatment of intravenous drug users with a peripherally inserted central catheter in an outpatient parenteral antibiotic treatment service, 2010.*
4. A. Khachatryan, Vektare, M. Xue, M. Dunne, J. Stephens. Costs of outpatient parenteral antibiotic therapy for the management of gram+ acute bacterial skin and soft tissue infections. Durata Therapeutics, Inc. 2012.
5. To Err is Human Report from the US Institute of Medicine on hospital-based avoidable medical errors. IOM, November 1999.
6. C.R. Bard, Inc., *Yahoo! Finance.*

Neuma Innovations. LLC
1070 Commercial Street
San Carlos, CA 94070